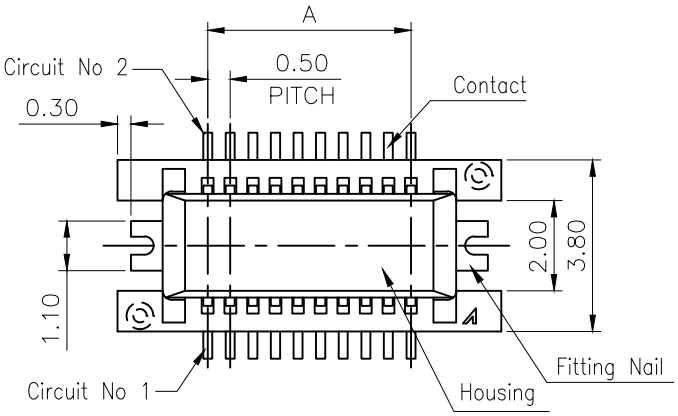

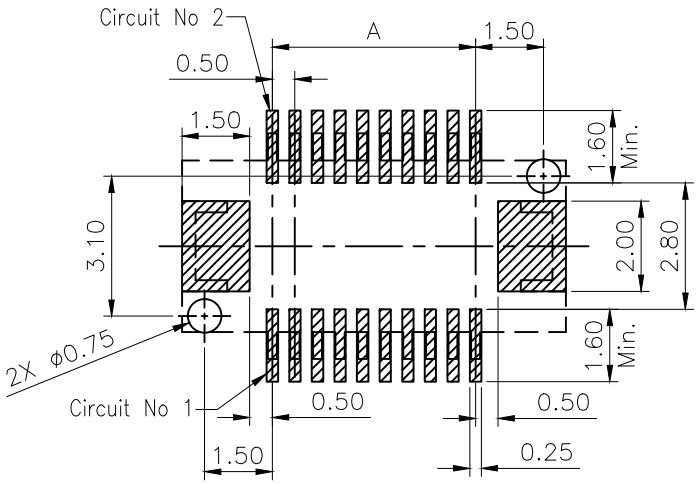

RECOMMENDED PCB LAYOUT
GENERAL TOLERANCE ±0.05

NOTES:
1. MATERIAL:
   1.1 HOUSING: THERMOPLASTIC, HIGH TEMP., UL94V-0;
   1.2 CONTACT: COPPER ALLOY
   1.3 FITTING NAIL: COPPER ALLOY
2. FINISH:
   2.1 CONTACT:
   GOLD FLASH OVERALL.
   50u" MIN. NICKEL UNDERPLATING OVERALL.
   2.2 FITTING NAIL:
   GOLD FLASH OVERALL.
   50u" MIN. NICKEL UNDERPLATING OVERALL.
3. REFLOW SOLDER CAPABLE TO 260°C PER ACES SPEC.
4. SPEC. PLS. REFER TO PS-50037-xxxxx-xxx
5. PACKAGE PLS. REFER TO 88159-XXXXX-TRP OR 50038-XXXXX-00-TRP
6. PART NUMBER

50038-XXX X X-XXX

NO OF CKT

PLATING
1.GOLD FLASH OVER ALL

PACKING
0:TAPE REEL
1:TUBE PACKAGE

XXX	Housing Color	Halogen Free	Polarization	PACKAGE
001	Black	HF	with boss	88159-xxxxx-TRP
002	Black	HF	without boss	50038-xxxCR-00-TRP

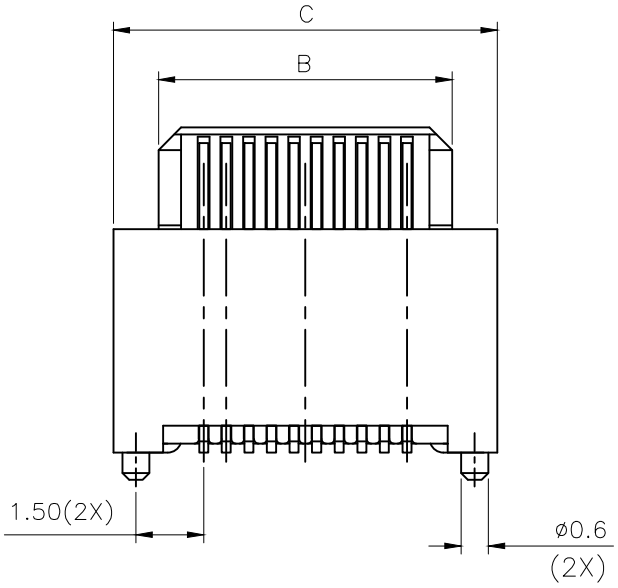

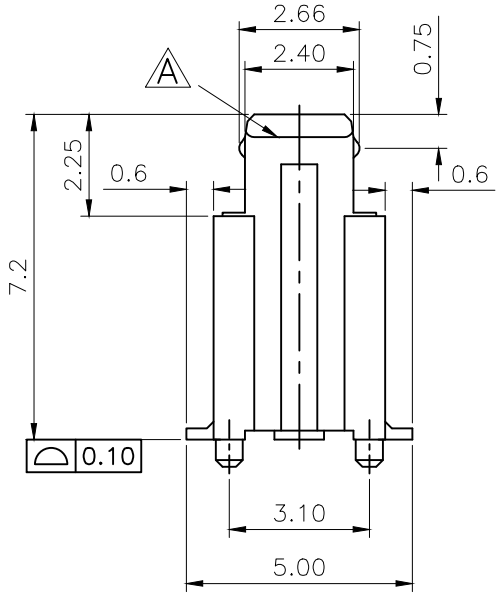

CKT	Dim A	Dim B	Dim C
16	3.5	5.5	7.5
20	4.5	6.5	8.5
26	6.0	8.0	10.0
30	7.0	9.0	11.0
40	9.5	11.5	13.5
50	12.0	14.0	16.0
60	14.5	16.5	18.5
70	17.0	19.0	21.0
80	19.5	21.5	23.5
100	24.5	26.5	28.5
120	29.5	31.5	33.5

一般公差
TOLERANCES
X. ±0.5 .XX ±0.15
.X ±0.25 .XXX ±0.1
ANGLES ±2°

宏致電子股份有限公司
Aces Electronic Co.,Ltd.

檢驗尺寸標示
SYMBOLS CR CR INDICATE CLASSIFICATION DIMENSION
CR MARK IS CRITICAL DIM.
MA MARK IS MAJOR DIM.

品名 (TITLE): 0.5mm PITCH BTB RCPT CONN. SMT D/R S/T TYPE

圖號 (DWG.NO): 50038-XXXXX-XXX

製圖 (DR) 22/01/17 HUYANG
審核 (CHKD) 22/01/17 BRAVE
核准 (APPD) 22/01/17 BRAVE

表面處理 (FINISH)
比例 (SCALE) 5:1
單位 (UNITS) mm
張數 (SHEET) 1 OF 1
SIZE A4
REV B